A
A
1600 mm

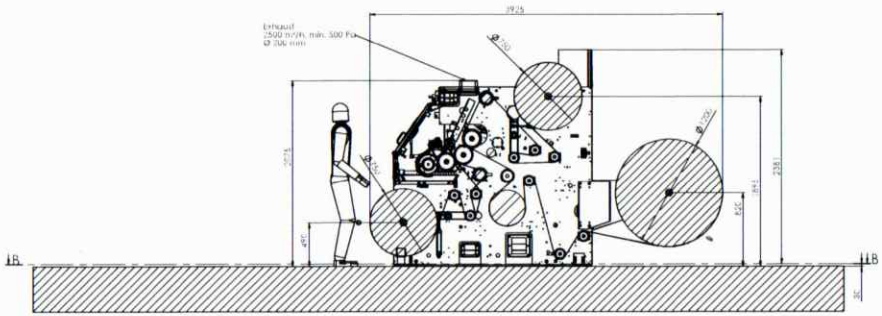

A-A

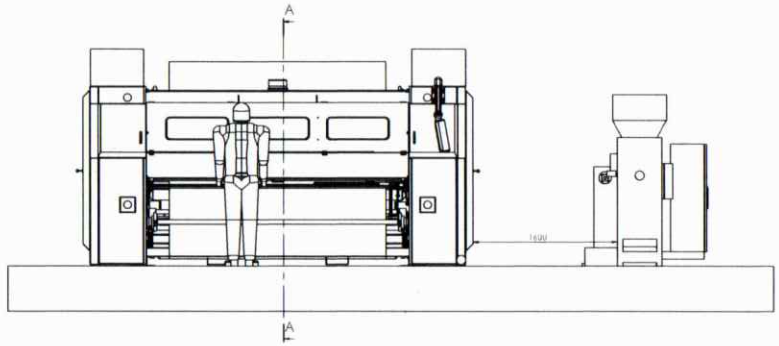

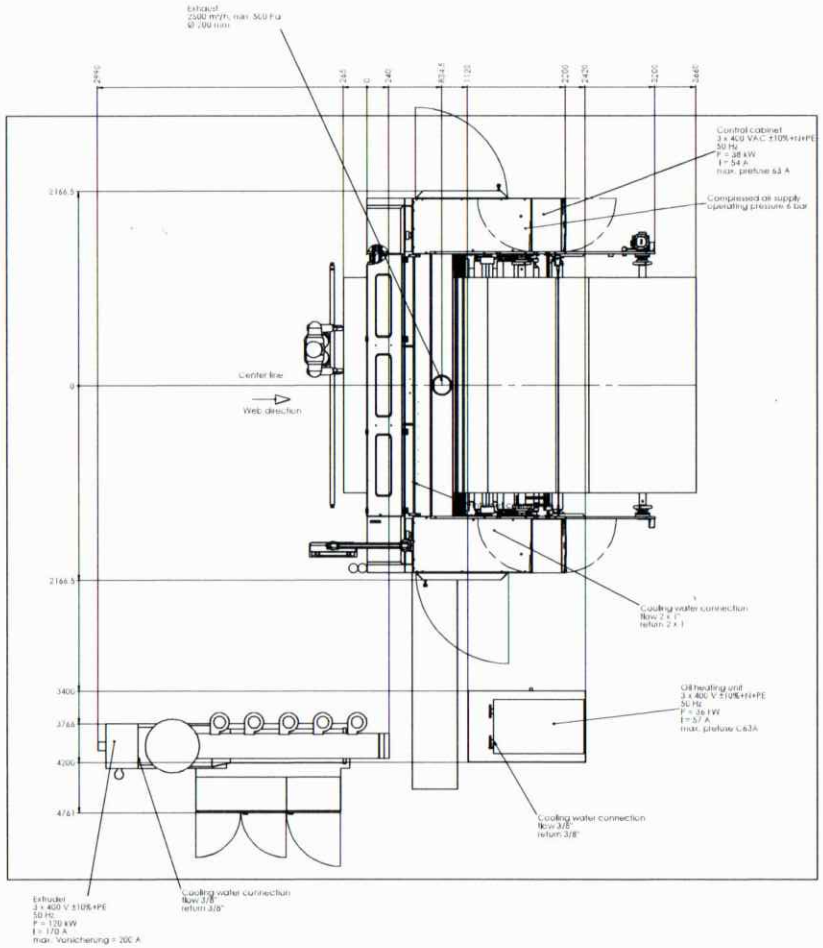

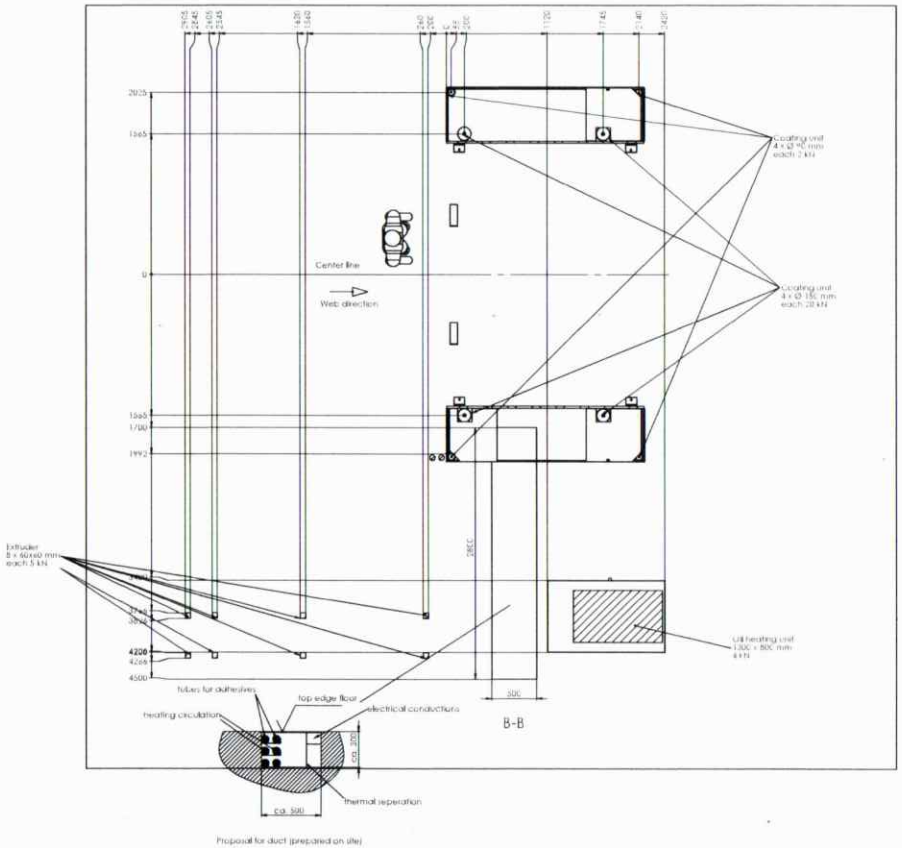

Proposal for duct (prepared on site)

Sharp
07.04.2016
Nikki
Last changes: Position
Extruder changed

Installation drawing			
A0	1015994		